IRB-RET2™

Universal UL325 Retroreflective Photoeye



Instruction Manual

The IRB-RET2 retroreflective, infrared photoeye is an external entrapment protection device type B1, non-contact sensor for use with automatic gates and doors. The reflector directs the beam back to the photoeye, therefore wiring to the other side of the roadway is not needed. The IRB-RET2 is compatible with most operators that accommodate monitored external entrapment devices per UL325. (six monitoring methods are available) The IRB-RET2 operates up to 60 feet over a wide range of voltages (6-40 VDC and 12-24 VAC). A red alignment indicator on the receiver provides easy set-up and alignment.

Cautions and Warnings

This product is an accessory or part of a system. Install the IRB-RET2 according to instructions from the gate or door operator manufacturer. Comply with all applicable codes and safety regulations.

Specifications

Operating Range	5 ft (1.5 m) to 60 ft (18.3 m)
Power	6-40 VDC, 12-24 VAC
Current (NC and 10K Monitoring Methods)	50 mA DC (relay activated)
Current (Pulse Monitoring Methods)	15 mA DC
Resistive Termination	10K ohm across NO contact (switch selectable)
Surge Protection	Thermal fuse, MOV
Relay Output Operation	Light ON/Dark ON
Response Time	250ms
Operating Temperature	-30° to 140°F (-34° to 60°C)
Dimensions (L x W x H)	5.1” (130 mm) x 3.15” (80 mm) x 5.5” (140 mm)
Ball Joint Mount Conduit Thread	½ Inch NPT

Ordering Information

- IRB-RET2 KIT — Retroreflective photoeye kit, includes photoeye, reflector with hood and mounting bracket.

Monitoring Methods

UL325 requires continuous monitoring of all safety devices connected to gate and door operators. Consult the gate or door operator manufacturer's instruction manual for the necessary monitoring method.

- **Normally Closed:** Cycles power to the transmitter while monitoring the receiver contacts for proper operation
- **10K Resistive Termination:** Provides a measurable 10K ohm resistance across the normally open (NO) contact when unobstructed
- **Two-wire Pulse (2 Frequency):** Provides 300Hz "heartbeat" unobstructed, 0Hz obstructed over power supply lines
- **Two-wire Pulse (3 Frequency):** Provides 300Hz "heartbeat" unobstructed, 2Hz obstructed, and 0Hz failure over power supply lines
- **Four-wire Pulse (2 Frequency)**: Provides 300Hz "heartbeat" unobstructed, 0Hz obstructed over separate connection
- **Four-wire Pulse (3 Frequency)**: Provides 300Hz "heartbeat" unobstructed, 2Hz obstructed, and 0Hz failure over separate connection

Installation

- Determine the mounting location of the IRB-RET2 photoeye according to UL325 guidelines.
- Deactivate the gate or door prior to and during photoeye installation.
- **The IRB-RET2 cannot be used for a detection range of less than 5 feet.**

1. Check the instruction manual of the gate or door operator to determine which monitoring method is required for that specific operator.

2. Unscrew the four back cover screws, then remove back cover. Feed wiring through ball joint opening.

The wiring to the enclosure must enter via a UL listed watertight fitting such as a strain relief or ½ inch NPT thread watertight conduit connector.

3. Review the configuration table and wiring diagram on PAGE 10 that corresponds with the monitoring method required for the gate or door operator. Wire the IRB-RET2 accordingly.

MUST USE 6-40 VDC FOR PULSE MONITORING.

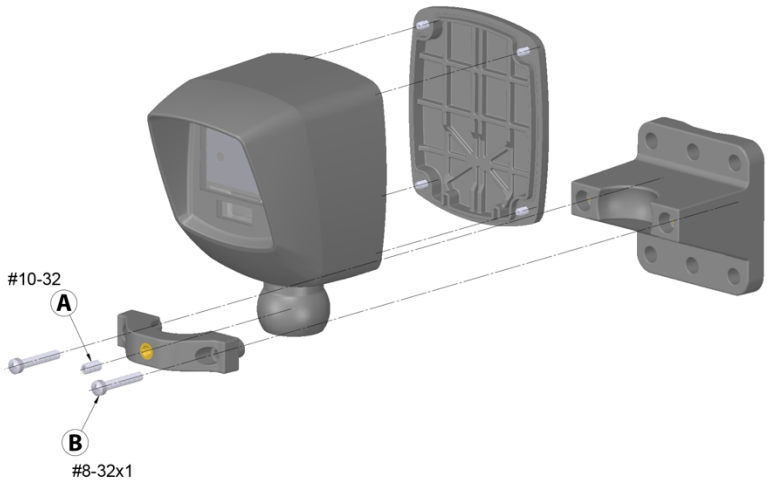

The IRB-RET2 has detachable screw terminals for easier wiring. Remove them while connecting wires, then plug them back in properly and secure them.

The 4-terminal connector on the right is for power, while the 5-terminal connector on the left is for control signals.

Be careful not to install the connectors upside down.

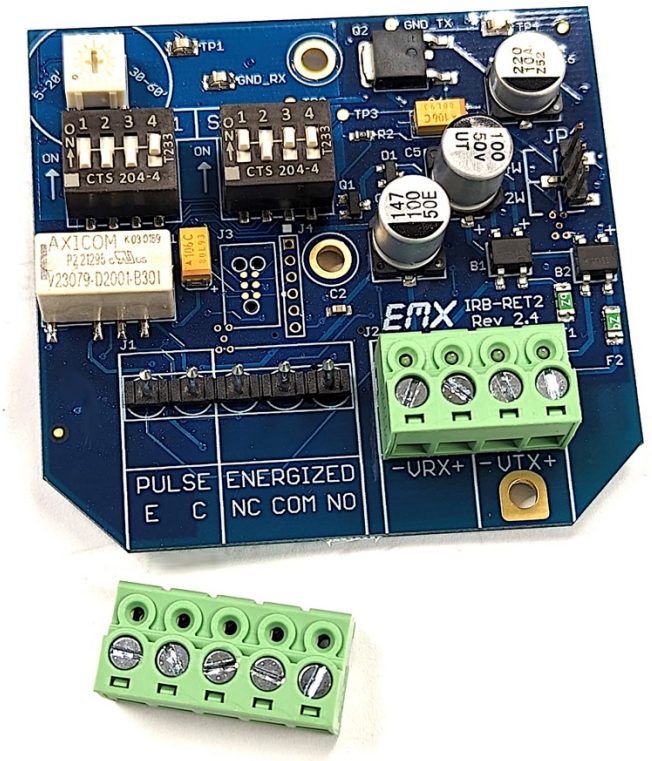

4. To mount the photoeye, first secure the bracket clamp base (ITEM C) to the mounting surface.

The mounting for a flat surface, such as a square tube or wall is shown below.

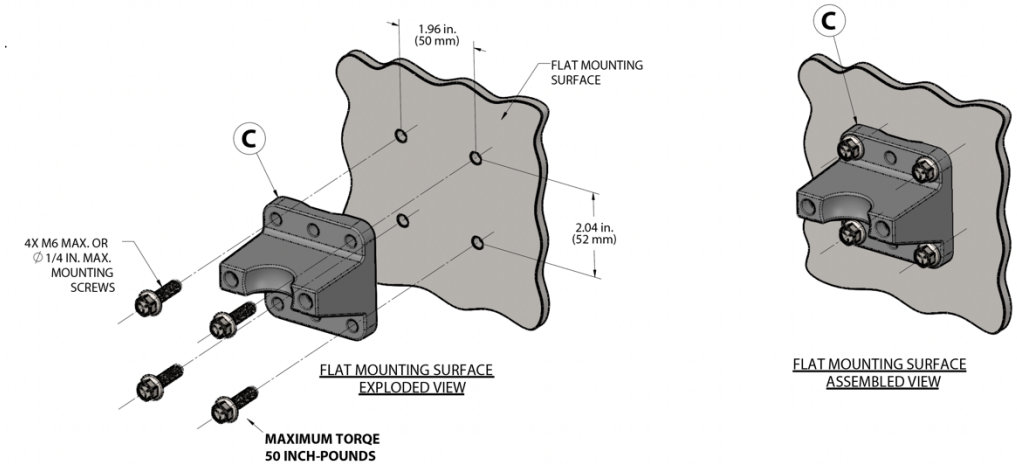

Mounting Position for Gates

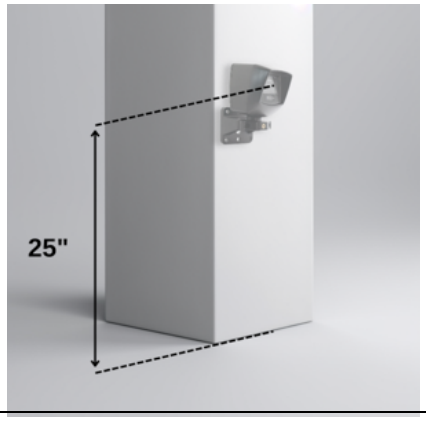

Mounting Position for Overhead Doors

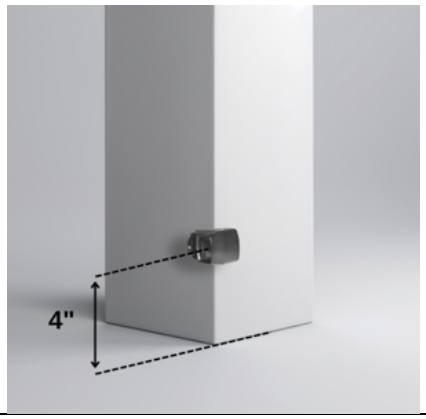

The mounting for a curved surface, such as a pole, is shown below:

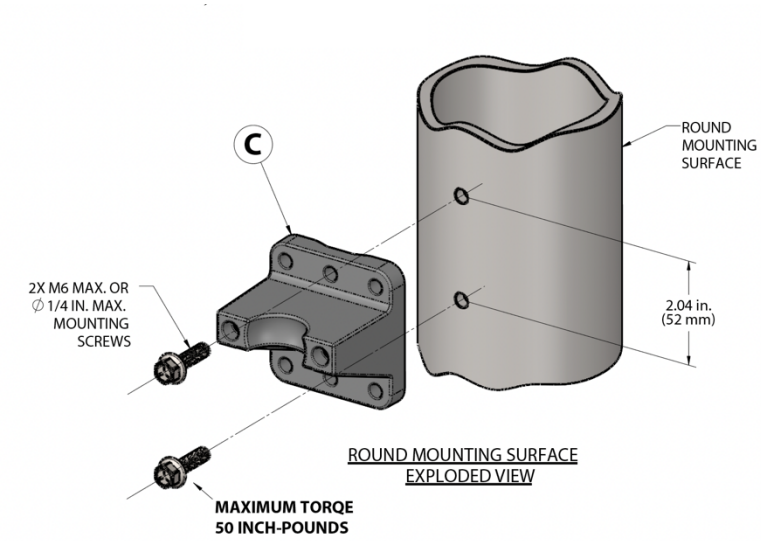

ROUND MOUNTING SURFACE
EXPLODED VIEW

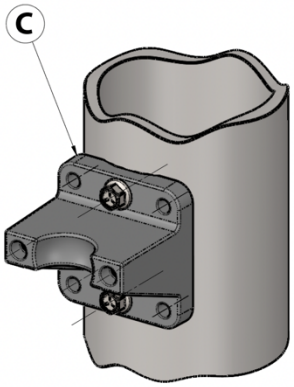

ROUND MOUNTING SURFACE
ASSEMBLED VIEW

Note the different screw locations for a flat vs. curved surface. The mounting patterns for flat and curved surface are shown below.

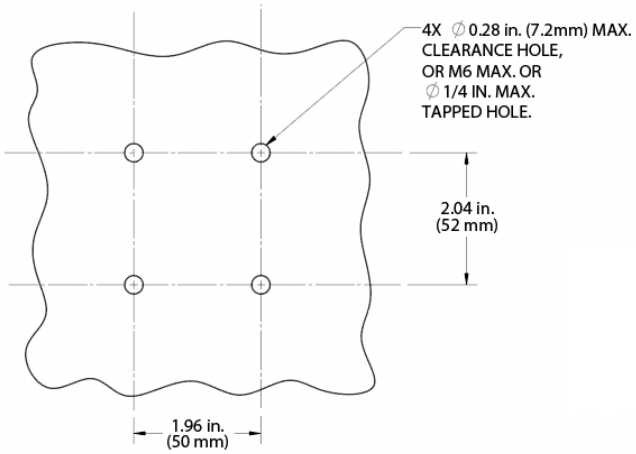

FLAT MOUNTING SURFACE
HOLE PATTERN

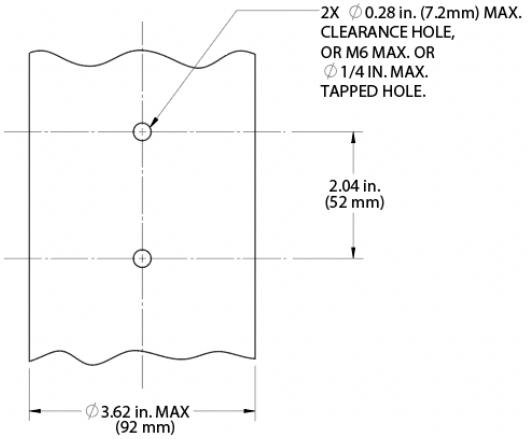

ROUND MOUNTING SURFACE
HOLE PATTERN

Bracket Mounting Template

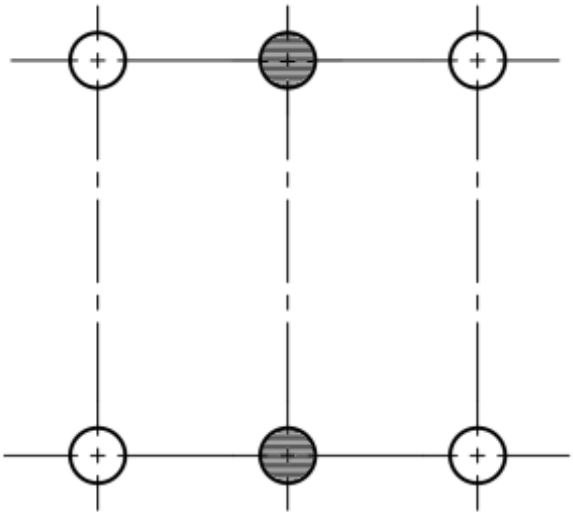

Use this line for levelling

Use shaded holes for a curved mounting surface.

Use other holes for a flat mounting surface.

Clearance hole size: 0.283" (7.2mm) max
Tapped hole size: 1/4" or M6 max

5. After mounting the bracket base, attach the photoeye and bracket clamp. Tighten the two bracket clamp screws (ITEM B) to secure the photoeye, but leave them loose enough for the photoeye to swivel using the ball joint during the alignment process.

LED Indicators		
Indication	**State**	**Safety State**
Green LED & Red LED On	Aligned with reflector, no obstruction	Safe
Green LED On & Red LED Flashing	Partial Alignment	Safe
Green LED On & Red LED Off	Beam obstructed or not aligned	Not Safe
Green LED Off	No power	Not Safe

6. Sensitivity Adjustment - Adjust sensitivity using potentiometer R1 (shown to the right) at the top left of the circuit board. Use the markings as a guide based on the distance between the sensor and reflector:

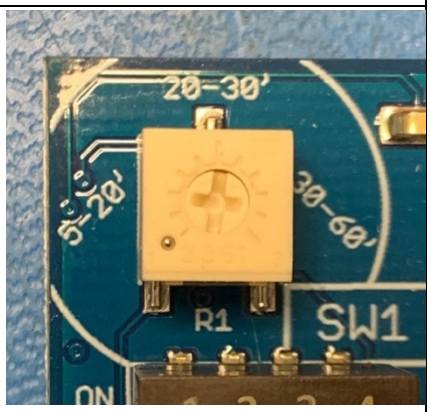

- 5-20 ft: Point the dial at the 5-20 ft marking
- 20-30 ft: Point the dial at the 20-30 ft marking
- 30-60 ft: Point the dial at the 30-60 ft marking

If you have trouble aligning the sensor or if you are concerned about rain, snow, or fog obstructing the IR beam, you can increase the sensitivity by adjusting the potentiometer clockwise.

Configuration - After setting sensitivity, check DIP switches SW1 and SW2, and jumper JP1 to ensure proper setup (refer to Configuration Table on PAGE 9 and Wiring Diagrams on PAGES 10-12). Adjusting sensitivity and configurations might be harder once the photoeye is aligned, as the back cover may not be easily accessible.

Stealth Mode – Enable Stealth Mode by turning ON Position 2 on DIP switch SW2. In Stealth Mode, LEDs turn off after 30 seconds if the sensor is aligned and unblocked, but turn on when obstructed, turning off again after 30 seconds. This mode is helpful for hiding the sensor from passers-by and vandals, especially at night. It can be used in any setup and doesn't affect other functions.

After final adjustments are made, replace the back cover ensuring the gasket is present, and tighten the screws.

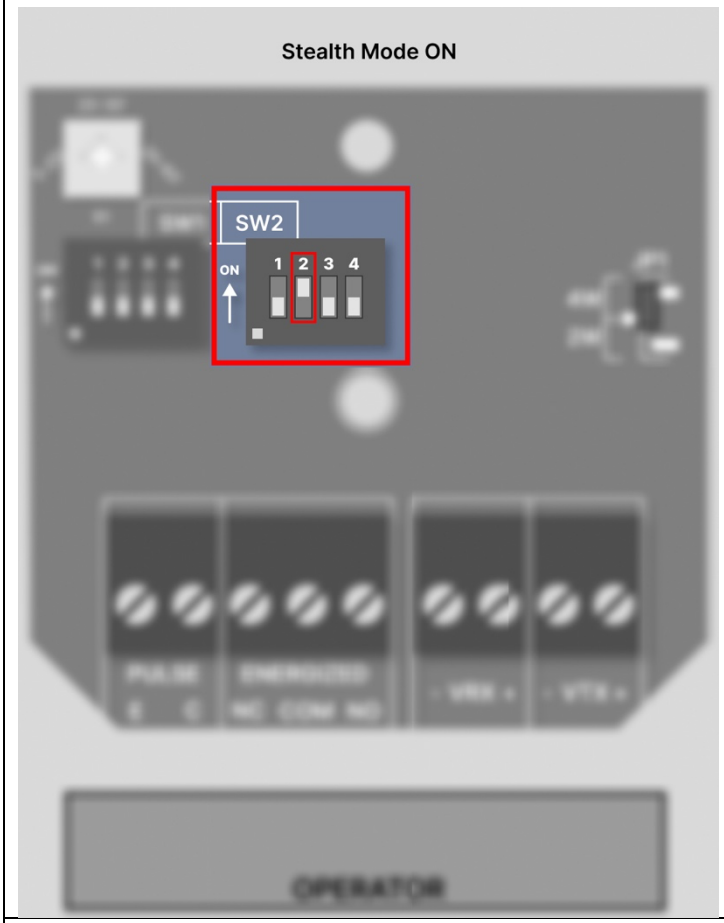

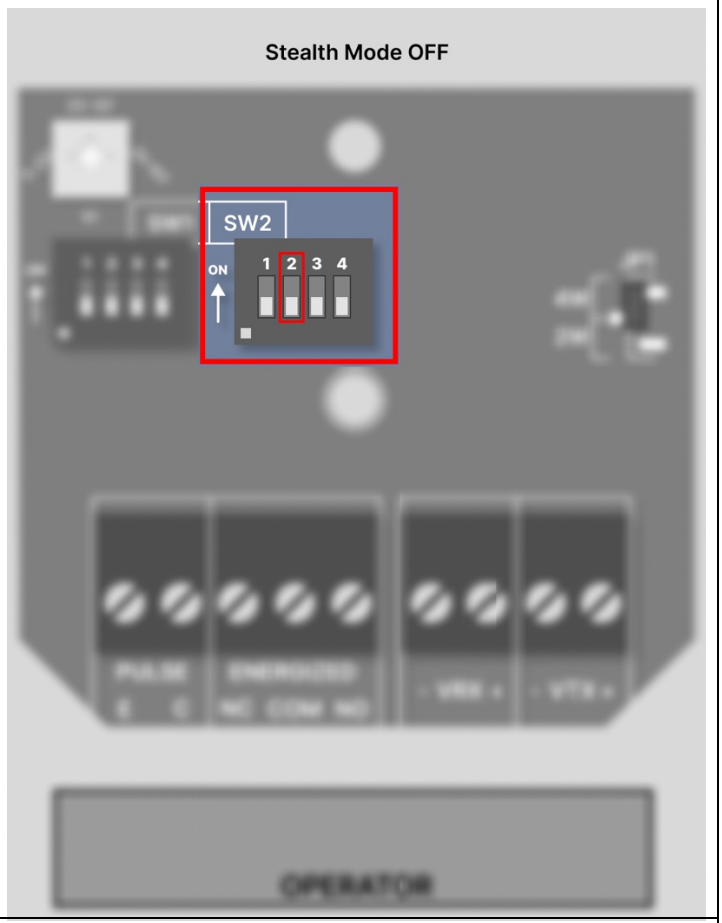

7. **Alignment:** Apply Power to the photoeye and aim it at the reflector's planned location. Go to the reflector's mounting spot. Move the reflector left, right, up, and down to find the center of the detection pattern (a typical installation will have a 2-foot diameter). The reflector should be placed in the center of the detection pattern for best performance.

   During this, ***watch the Red LED on the photoeye during alignment****.* ***A solid RED LED means the best alignment.*** *If the alignment isn't optimal, the Red LED will flash. Slow flashing means poor alignment, while fast flashing indicates better alignment.*

   If you cannot get the photo eye to align near your intended mounting location, adjust the aim of the photoeye and repeat this Alignment process.

   Note: If Stealth Mode is on (STEP 6), LEDs turn off after 30 seconds when the photoeye is powered and aligned. To turn LEDs back on, briefly block the light beam with an object in front of the reflector. LEDs will turn on for 30 seconds before turning off again.



8. To ensure the integrity of the enclosure, make sure the gasket is present, the cover is properly seated, and the cover screws are tight. The wiring to the enclosure must enter via a UL listed watertight fitting such as a strain relief or ½ inch NPT thread watertight conduit connector.

9. Tighten the two bracket clamp screws (ITEM B) and the set screw (ITEM A). (3/32" allen wrench is required)
10. Verify that the photoeye and reflector are aligned.
11. Place an obstruction (ex. hand) between the photoeye and reflector. The red LED will turn off. Remove the obstruction and the red LED will turn on.
12. Check the operator control board and verify that the safety input is recognized by the operator. Test the beam with an obstruction between transmitter and reflector at multiple distances to confirm proper operation.
13. Follow the gate or door operator manufacturer's installation instructions and safety checks to verify that the photoeye is operating properly.

Configuration Settings and Wiring Diagrams

Terminals	Description
VTX	Transmitter power input
VRX	Receiver power input
Pulse C	Isolated pulse output collector
Pulse E	Isolated pulse output emitter
Energized NO	Normally open contact, relay output shown in energized state (power on, and no obstruction) when properly aligned to the reflector
Energized COM	Relay common
Energized NC	Normally closed contact, relay output shown in energized state (power on, and no obstruction) when properly aligned to the reflector.

Configuration Table

Monitoring Method	Diagram	DIP Switch 1 Settings				DIP Switch 2 Settings				Output Connections	Power Connection	JP1
		1	2	3	4	1	2	3	4			
Normally Closed	A	OFF	OFF	OFF	ON	OFF	OFF	ON	ON	NC, COM	VRX	4W
10K Resistive Termination	B	OFF	OFF	OFF	ON	ON	OFF	ON	ON	NO, COM	VRX	4W
Normally Closed: Power Cycle Transmitter Only	C	OFF	OFF	OFF	ON	OFF	OFF	OFF	OFF	NC, COM	VRX, VTX	4W
Two-Wire Pulse (2 Frequency: 300Hz, 0Hz)	D	ON	OFF	OFF	ON	OFF	OFF	ON	ON	VRX	VRX (DC Only)	2W
Two-Wire Pulse (3 Frequency; 300Hz, 2Hz, 0Hz)	E	OFF	ON	OFF	ON	OFF	OFF	ON	ON	VRX	VRX (DC Only)	2W
Four-Wire Pulse (2 Frequency: 300Hz, 0Hz)	F	ON	OFF	OFF	ON	OFF	OFF	ON	ON	E,C	VRX	4W
Four-Wire Pulse (3 Frequency: 300Hz, 2Hz, 0Hz)	G	OFF	ON	OFF	ON	OFF	OFF	ON	ON	E,C	VRX	4W

Table 1: PCB Configurations

- **For two-wire pulse monitoring, use 6-40VDC. 2-wire pulse will not work with any AC input voltage.**

- The relay contacts labeled on the terminals and the references to them in these instructions are shown in the energized state, and no obstruction. (Dark ON setting – normally open (NO) contact closes when the beam is unobstructed.)

- 2-Wire Pulse configurations require current limiting in the operator.

- 4-Wire Pulse output provides an emitter (Terminal “E”) and collector (Terminal “C”) connection to the operator. The emitter is generally connected to the circuit common (ground) and the collector is typically an open-collector output using a pull-up resistor to low-voltage DC power.

Wiring Diagram A:
Normally Closed

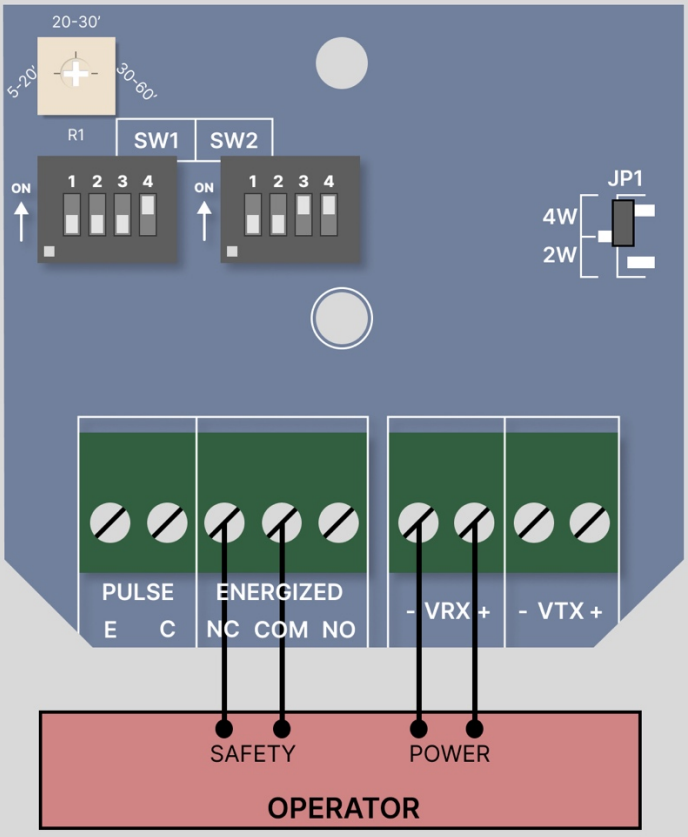

Wiring Diagram B:
10K Resistive Termination

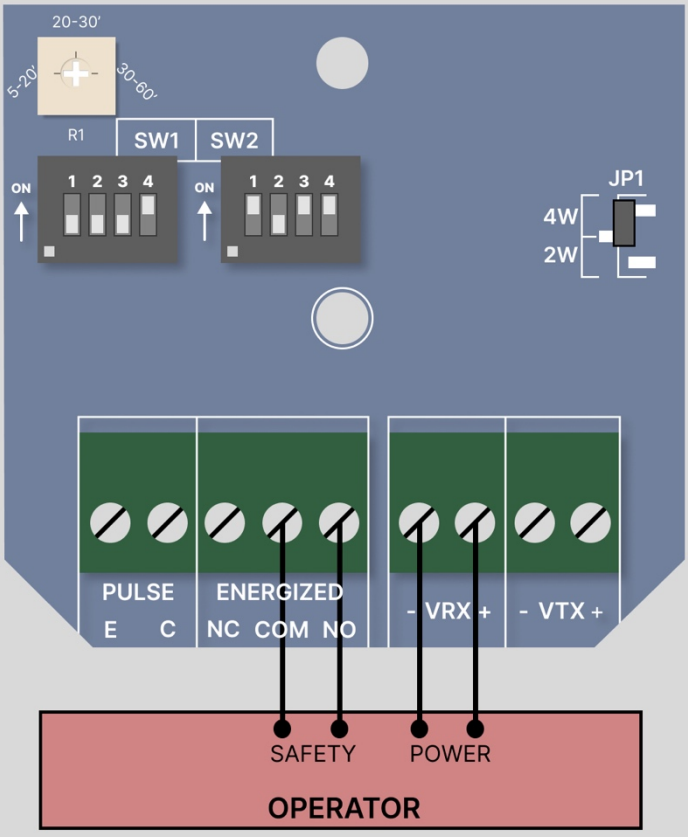

Wiring Diagram C:
Normally Closed: Power Cycle Transmitter Only

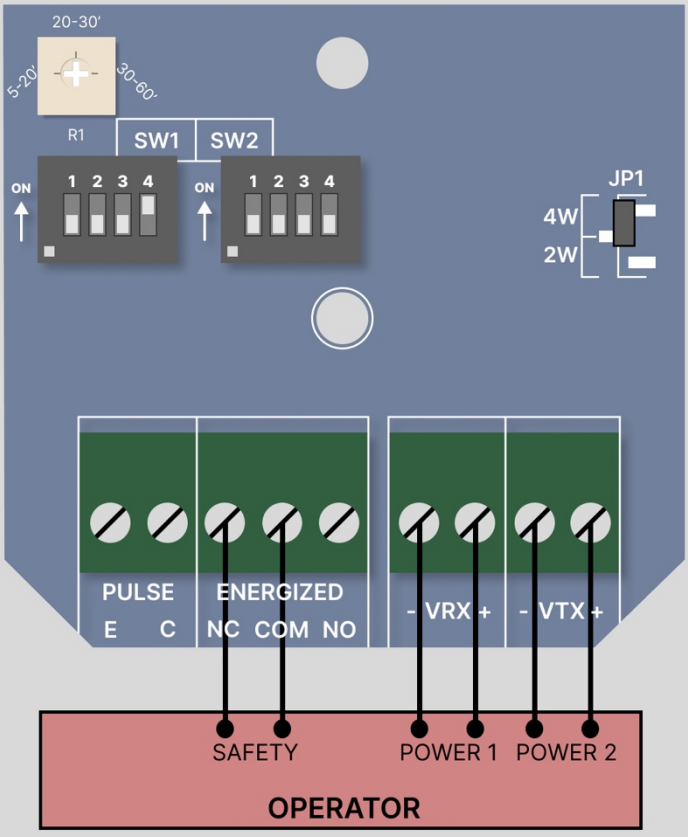

Wiring Diagram D:
Two-Wire Pulse (2 Frequency: 300Hz, 0Hz)

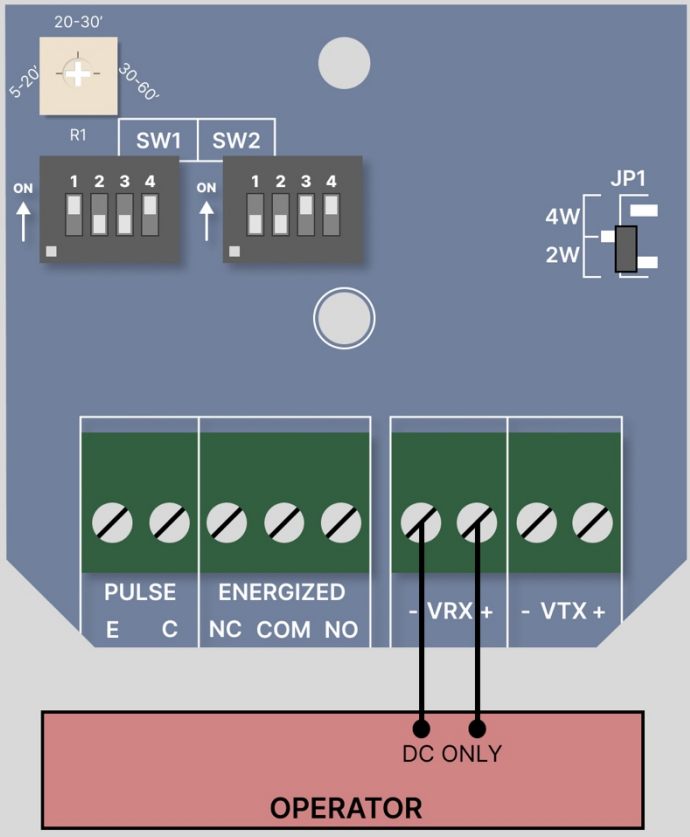

Wiring Diagram E:
Two-Wire Pulse (3 Frequency; 300Hz, 2Hz, 0Hz)

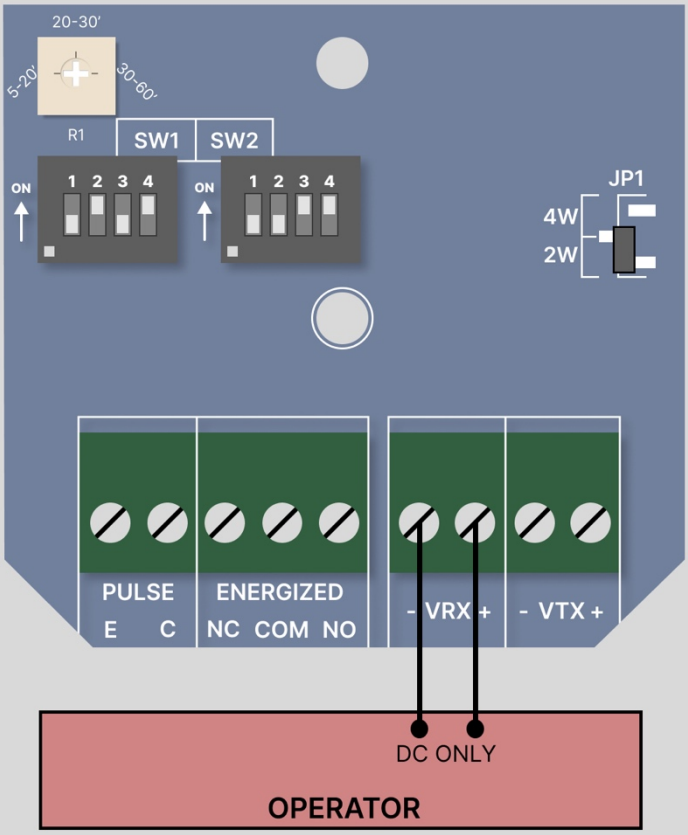

Wiring Diagram F:
Four-Wire Pulse (2 Frequency: 300Hz, 0Hz)

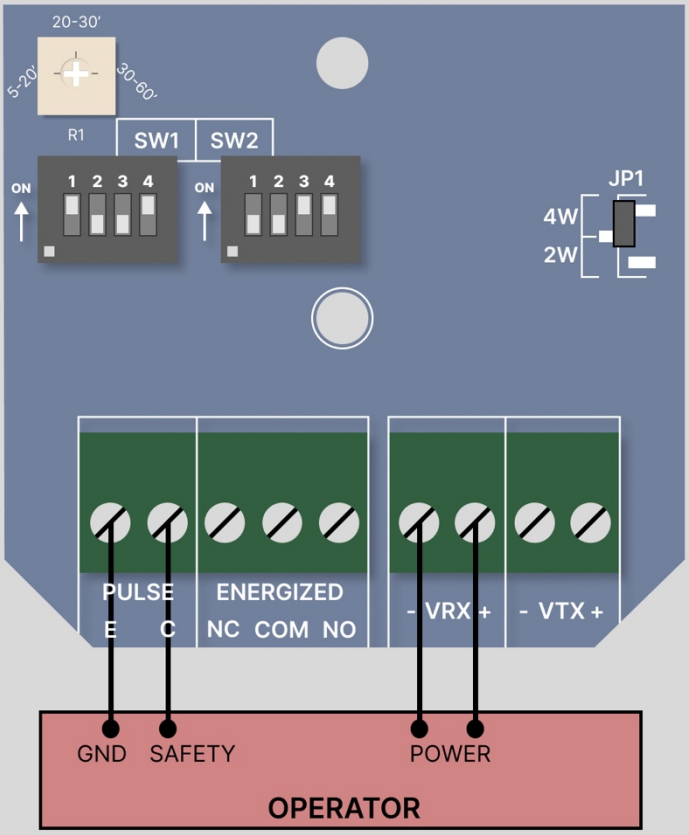

Wiring Diagram G:
Four-Wire Pulse (3 Frequency: 300Hz, 2Hz, 0Hz)

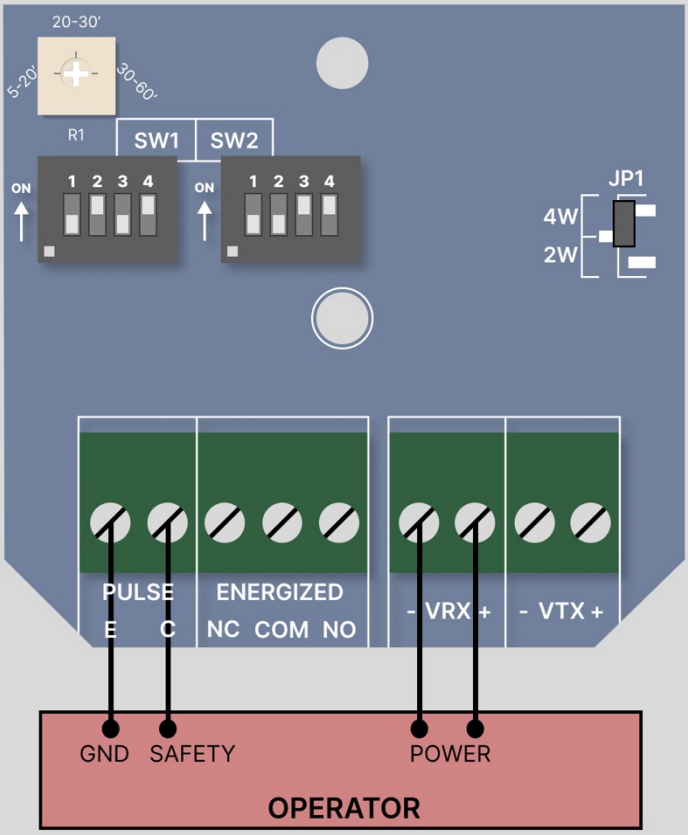

Troubleshooting

Symptom	Possible Cause	Solution
Does not detect obstruction	Signal is reflecting off another surface	Check area for highly reflective surfaces such as a shiny vehicle. Possible solutions are to move the photoeye farther away from the roadway or adjust the sensitivity counter-clockwise.
Red LED flashes continuously.	Sensitivity is too low Photoeye is not aligned with reflector	Adjust the sensitivity clockwise according to STEP 6. Realign the reflector according to STEP 7 under installation.
Photoeye activates but does not transmit signal to operator	Faulty connection between photoeye and operator control input	Verify all wires and terminal connections to operator.
Green LED not on when powered	DIP switch SW2 positions 3 and 4, not in the correct position	Switch DIP switch SW2 positions 3 and 4 to “ON”. Verify input power is between 6-40 VDC / 12-24 VAC and wire per the wiring diagram.
Device will not align, No Red LED	No transmitter power	Turn DIP switch SW2 position 3 and 4 to ON OR Wire power to VTX

Warranty

EMX Industries, Inc. products have a warranty against defects in materials and workmanship for a period of two years from date of sale to our customer.