cellgate

2019



W410 Series

Quick Install Guide

Power Door Products

(914) 698-5083

www.PowerDoorProducts.com

WATCHMAN

W410

Recommended wiring: 18/6 shielded for main device, and 18/4 shielded for optional wiegand devices ⚠

Items Included in Kit

1. **W410 Unit**
2. **12 Volt DC Power Supply**
3. **Magnetic Read Switch** ⚠
4. **Keys** *(Note: Leave one key with the customer)*
5. **Nuts** X 4
6. **Bolts** X 4
7. **Quick Install Guide**
8. **Activation & Test Process**
9. **Customer Information Packet**

W410 Unit

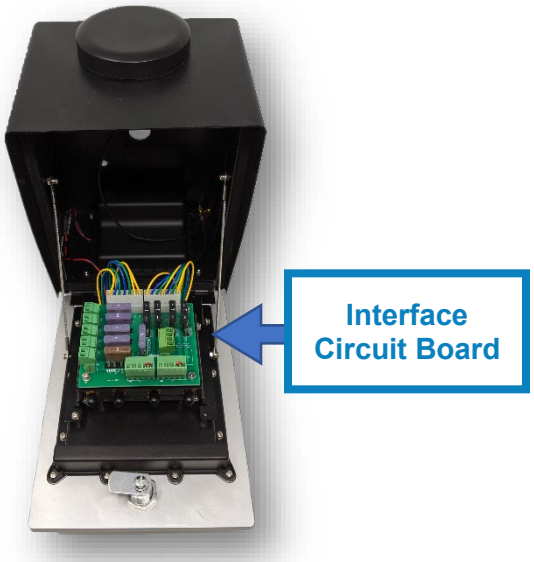

Power Supply Wiring

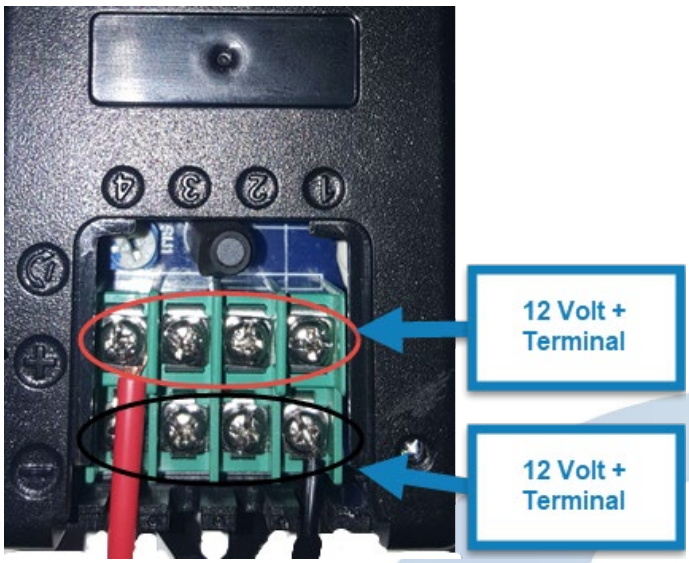

Interface Circuit Board (Oriented the same as the Watchman install)

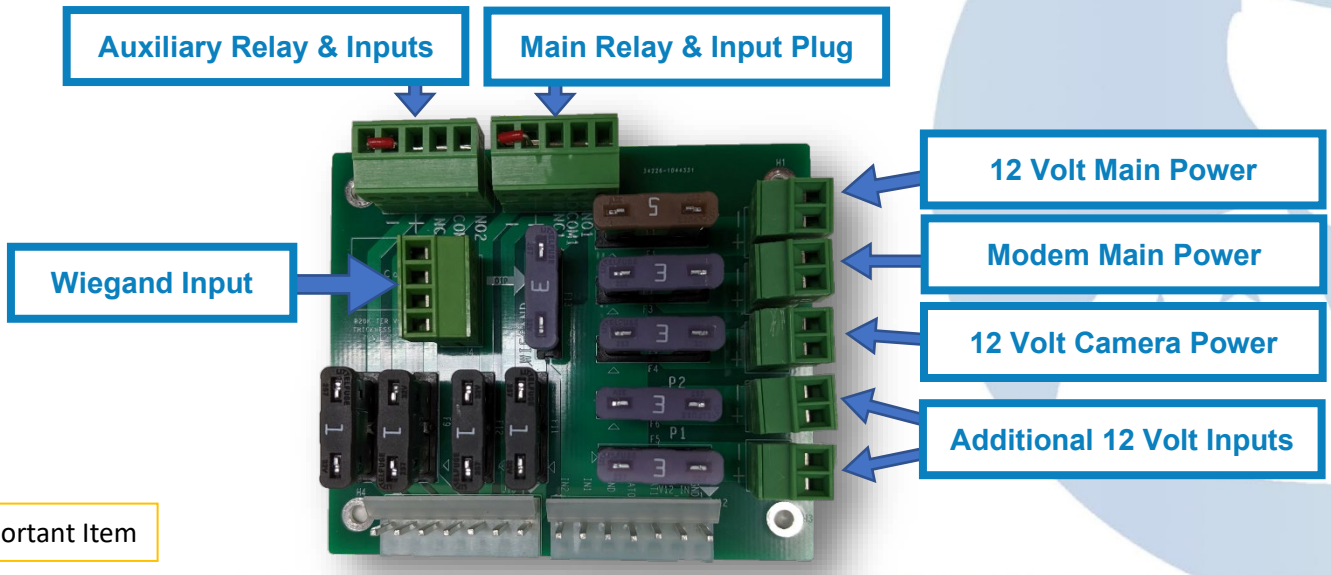

⚠ Important Item

WATCHMAN

W410

Interface Wiring Diagram (Oriented the same as the Watchman install)

3 **To Magnetic Switch or Dry Contact on Operator**
Gray Is Negative
White is Positive

2 **To Gate Operator**
Free Exit, Or Exit Terminal
Yellow Is Positive +
Blue Is Common Ground
Normally Open
Connection

4 **Optional Wiegand 26 Bit Connection**
Red Is 12 Volt Power
Black is Ground
Green is Data 1

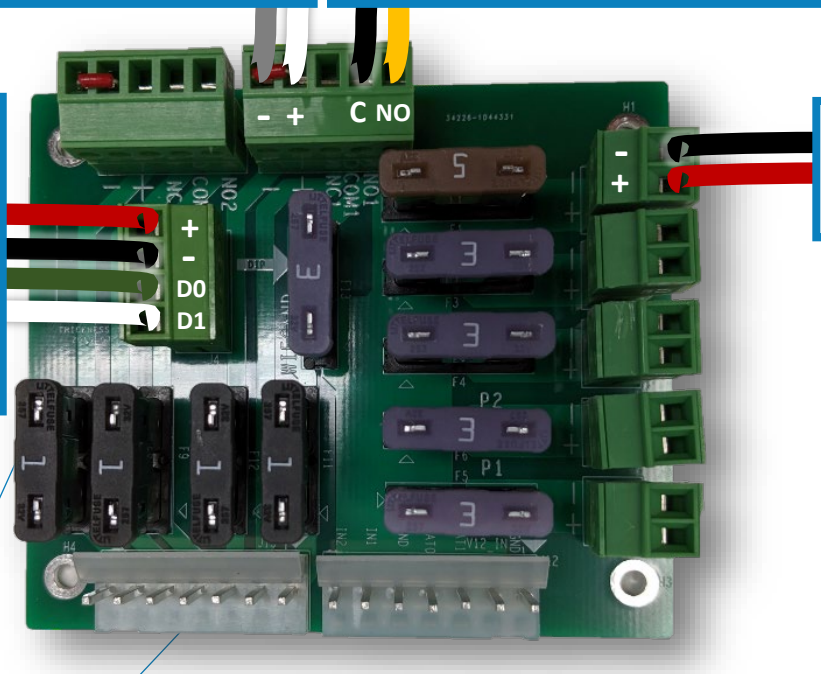

1 **Main Power**
12 Volt Input Power



6-Wire Installation Instructions

1. Wire **main power** from the transformer to the power connector on the circuit board.
2. Connect gate trigger wires from the **Normally Open** (NO) and **Common** (C) to the free-exit or exit terminals on the gate operator.
3. Connect the gate status wires on the 6 pin connector on the main relay and input plug to the magnetic switch or a **Dry Contact**, Normally Closed (NC) relay on the gate operator.
4. If using an optional 26-bit reader (ex., keypad, card reader, RFID, or clicker), wire the device to the **Wiegand connection** on the interface circuit board.
5. Use **Camera Guide** if adding optional external camera.
6. Test/activate using the test credentials on the **Activation & Test Process** document. ⚠

⚠ Important Item

Optional External Camera Wiring Diagram

WARNING: DO NOT MAKE ELECTRICAL CONNECTIONS TO CAMERA WITH THE SYSTEM ENERGIZED. THIS WILL DAMAGE THE CAMERA AND IS NOT COVERED UNDER THE CAMERA WARRANTY.

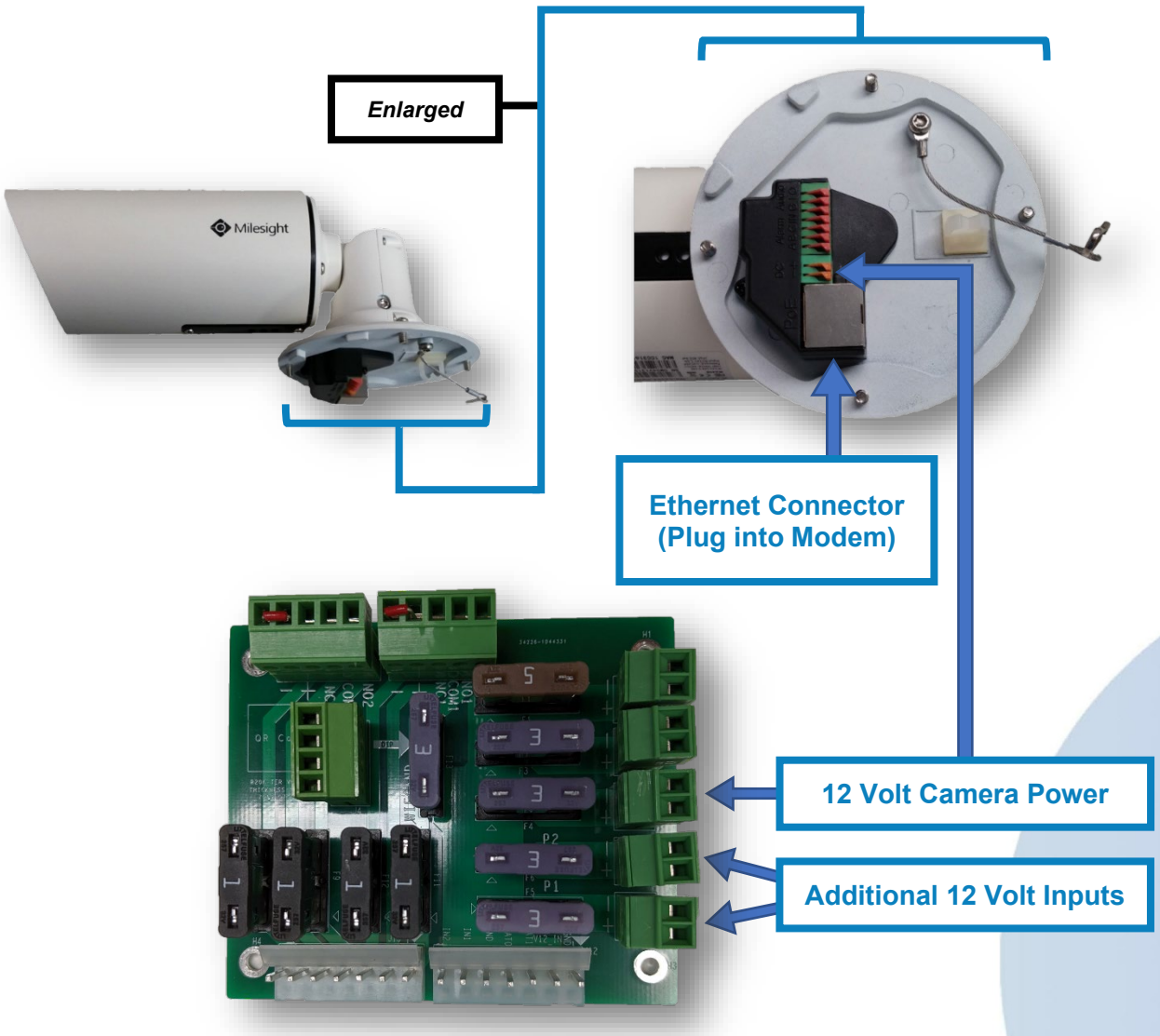

W410 Testing Guide

Username: _____

Password: _____

Portal Address: user.zapopen.com

v.1

This document will provide the steps needed to test the W410 unit on the customer site. The first part of the procedure requires logging into the web portal system and setting up some users to create codes and access permissions.

Once the web portal configuration is complete, you are ready to go on-site. The other part of the document provides the details on the electrical connections needed to be made in the W410 unit. In addition, the appendices provide information on how to connect the W410 to various gate controllers.

Please note: The physical installation of the W410 unit to a stand or pole should follow standard construction procedures and meet all code requirements. All electrical cables should be run in conduit, this includes both power and Ethernet cables needed for the operation of the system.

Parts List

Provided:

- W410 Unit
- 12 V DC Transformer with 5A capability Installation Guide
- Web Portal User Guide
- Web Portal Quick Start Sheet Carriage Bolts and Nuts External Camera - Optional

Required for installation:

- Mounting Hardware (post, bolts, nuts, etc.
- 18/6 shielded wire for power and gate connections
- 18/4 shielded wire for optional external camera connection Ethernet Cable for optional external camera connection

In addition, it is recommended to have a laptop with a network connection to facilitate testing of the unit post installation.

This guide provided by CellGate, is intended as a reference guide for the installation of the W410 Product.
It is not intended to be used as a public resource outside of CellGate.

Prior to installing the W410 System at the customer location, it is recommended the following steps are completed. This will allow for on-site testing when the installation is complete.

Adding Access Codes - Login into the web portal using the login information provided by CellGate. Portal Link: user.zapopen.com - Verify device information on the portal dashboard for: ▪ Gate Trigger ▪ Internal Camera ▪ External Camera (if applicable)	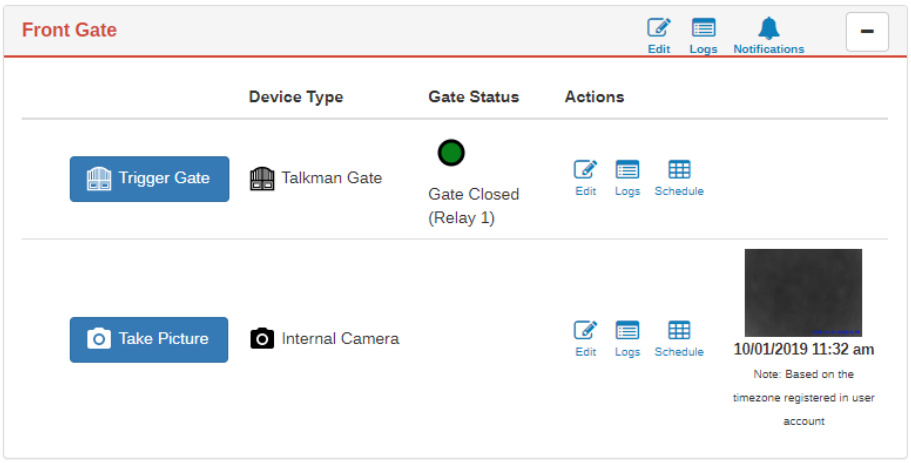
- Go to the "Users" section and select the customer's user.	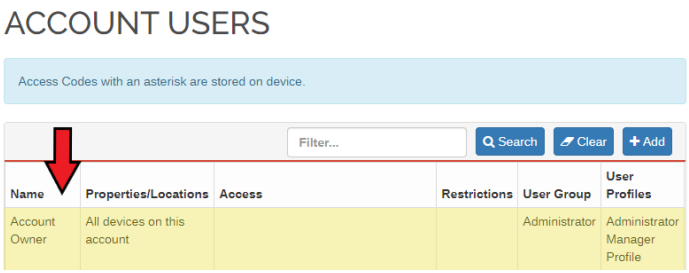
- Under "Access Methods", select "Access Code".	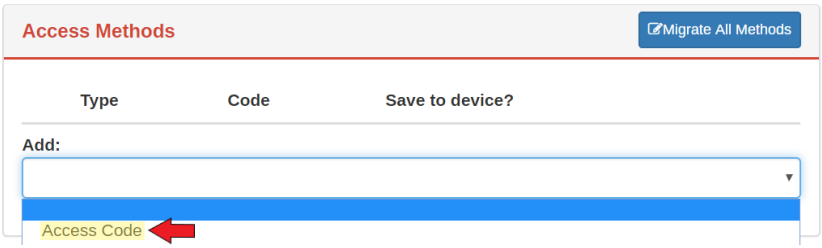
- Enter a new access code to be used during testing of the unit. - Click "Add".	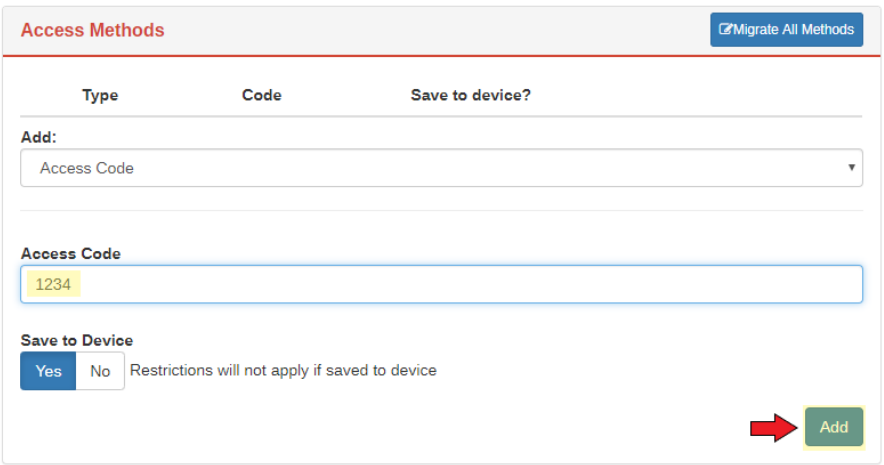

This guide provided by CellGate, is intended as a reference guide for the installation of the W410 Product.
It is not intended to be used as a public resource outside of CellGate.

Call Group Configuration

- These are the people the system will call when the "Push to Call" button is pressed on the front of the unit.

- To create a Call Group, click "Callgroups".

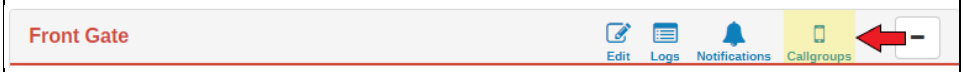

- Click "Edit Callgroup" across from the callgroup.

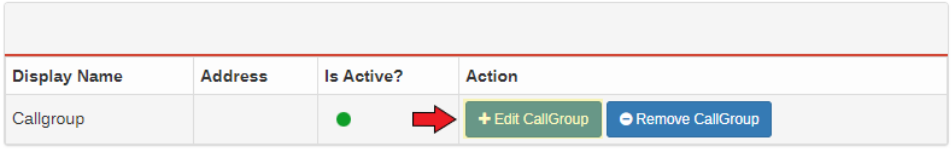

- 1st Group Called (30 sec) Define up to three numbers to be called first.

- 2nd Group Called (30 Sec) Define up to three additional numbers to be called if no one in the 1st Group answers.

- Click "Save".

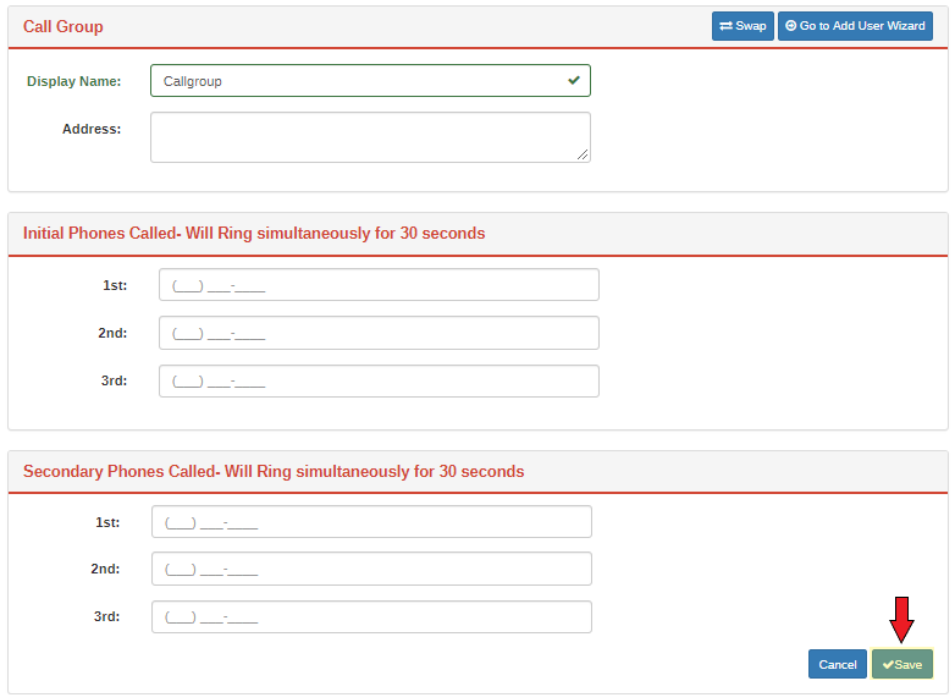

This guide provided by CellGate, is intended as a reference guide for the installation of the W410 Product.
It is not intended to be used as a public resource outside of CellGate.

Once the electrical connections are made, it will take the modem 5 minutes to complete initialization. After this is complete the modem lights should be as follows:

Blue (Relay Light Status)	Red (Connection Error)	Green (Everything is Working)
1. Blink Slow: Relay 1 Activation	1. Blink Slow: No Phone Account Connection	1. Blink Slow: Connected
2. Blink Fast: Relay 2 Activation	2. Blink Fast: No Internet Connection	
3. Solid Blue Light: Both Relays Are Active	3. Solid Red Light: No Ethernet Connection Detected	



This guide provided by CellGate, is intended as a reference guide for the installation of the W410 Product.
It is not intended to be used as a public resource outside of CellGate.

Post Installation Testing

Once the system is fully installed and booted the following tests should be performed to confirm proper configuration and installation.

Action	Expected Result
- From the unit, enter a valid entry code. - Press the key button after you've entered your code. 	- Gate opens. - Green door open light on unit lights Notifications defined for gate open sent. - Pictures from cameras sent to devices defined in the notification. - Web Portal dashboard displays picture. - Web Portal log displays successful opening of gate. - Web Portal log displays success of picture taken.
- From the unit, enter an invalid code. - Press the key button after you've entered your code. 	- Gate remains closed. - Invalid code notification sent Pictures from cameras sent. - Web Portal dashboard displays picture Web Portal log displays invalid code entry. - Web Portal log displays success of picture taken.
- From the Web Portal, trigger the gate to open.	- Gate opens. - Green door light on unit lights Notifications defined for gate open sent. - Pictures from cameras sent to devices defined in the notification. - Web Portal dashboard displays picture. - Web Portal log displays successful opening of gate. - Web Portal log displays success of picture taken.
- From the Web Portal, trigger the internal camera (and trigger external camera if applicable).	- Pictures sent to devices defined in notifications Web Portal dashboard displays picture. - Web Portal log displays success of picture taken.
- From the unit, Push the Push to Call button – NO ANSWER 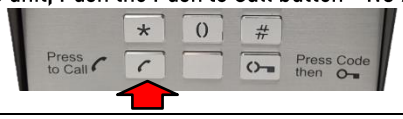	- Users defined in Call Group 1 receive call. - Users defined in Call Group 2 receive call.
- From the unit, Push the Push to Call button – ANSWER 	- User defined in Call Group 1 answers call.

This guide provided by CellGate, is intended as a reference guide for the installation of the W410 Product.
It is not intended to be used as a public resource outside of CellGate.

- Trigger gate from smartphone app.	- Open app. - Tap on the gate icon. - Tap the "Open Momentarily" button to activate the gate.
- Open gate and block it from closing for 3 minutes (prop open)	- Prop Open notification is sent to devices defined in notifications. - Web Portal dashboard will show gate in OPEN state. - Web Portal log will display gate in prop open.
- After propping gate open for 3 minutes allow gate to close	- Prop Open closed notification is sent to devices defined in notifications. - Web Portal dashboard will show gate in Closed state. - Web portal log will display gate has closed.

This guide provided by CellGate, is intended as a reference guide for the installation of the W410 Product.
It is not intended to be used as a public resource outside of CellGate.

Troubleshooting Guide

In the event there is a problem with the installation, please refer to the table below for a possible solution.

Condition	Possible Resolution
- Unit does not power up	- Check 12V power connections to the unit.
- Modem does not power up	- Check 12V power connections both on the board and on the back of the modem.
- Gate does not open	- Check connections on the gate controller and verify they match the controller block on the W410 control board. - Unplug control block from W410 control board and tie the Normally Open and Common together. (These are the yellow and blue wires from the diagram above.) This should trigger the gate to open. If it does not, there is a continuity problem in one of the two wires.
- Gate code does not work	- Verify the correct gate code in web portal. Make sure to press "key" button to enter code. - Verify user the code is associated with code has permission to open gate.
- External camera not powered	- Verify cabling and connections on camera and in the W410 Unit.
- External camera is not taking pictures	- Verify Ethernet cable is properly connected on the camera and on the Ethernet switch. - Verify Ethernet connection on switch is active. There are lights on top of the switch that should be lit for all connected devices.
- Unit connection to web portal inconsistent	- Check modem for signal strength Check antenna connections on modem. - Verify power connections on modem.

This guide provided by CellGate, is intended as a reference guide for the installation of the W410 Product.
It is not intended to be used as a public resource outside of CellGate.