Model No. **Lando-CS-10x8-E**

PRODUCT FEATURES

- Designed for security professionals
- Black wrinkle powder coating w/ UV protection
- Universal design
- Heavy duty 14-gauge material
- Steel construction
- Military-grade EPDM rubber seal
- #304 Stainless steel hinge
- 3" Backbox space
- 3" Weather/privacy shroud
- Removable door
- Cam lock included
- Knockouts on backside
- IP54 rating
- NDAA, Buy American, or USMCA/CUSMA compliant
- In-stock, ready-to-ship
- Available direct or through distribution



CUSTOM OPTIONS

- Factory cutouts available for your devices
- Shorten or extend height, width, or depth
- Readily available powder coating colors (white, yellow, bronze, gray, silver)
- Choose any RAL powder color

DESCRIPTION

A sturdy steel housing to combine one or more access control devices such as keypads, card readers, intercoms, and entry/exit buttons side by side. Mount on a wall or pedestal at a gate, lobby, or entryway. Outdoor rated with weather/privacy shroud, EPDM rubber seal, stainless steel hinge, and polyester powder coating with UV inhibitor. Convenient knockouts on the backside. Cam lock included. Door is removable.

RECOMMENDED ACCESSORIES

ROTATING HEAD	BUFFER PLATE	HEATER	COOLING FAN	LIGHT KIT
				
OMNI-4W5T-BLK	46PLA-PRO-001-HDP	ACC-HEA-001-304	ACC-FAN-001-304	ACC-LED-001

NOTE: Real time inventory levels are viewable for registered users on pedestalpro.com

Model No. **Lando-CS-10x8-E**

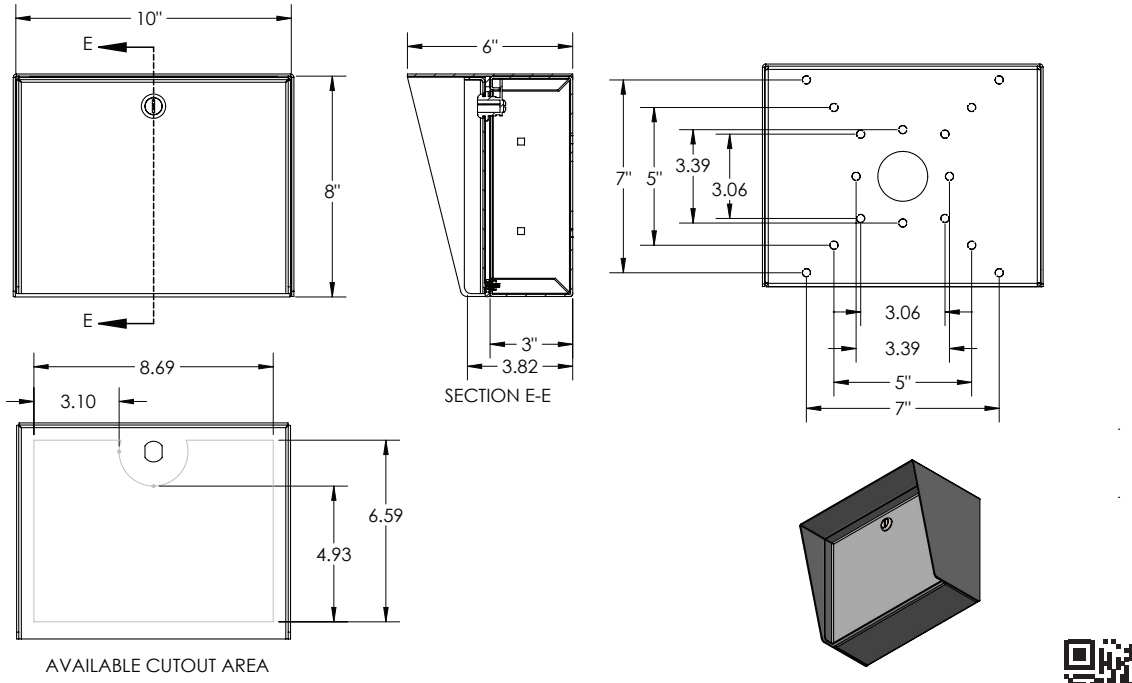

NOTE: CAD drawing available online.
Scan for more detail.

DATA & SPECS

Product Style	Housing
Material	Steel, .0749" (14 gauge)
Tube	#304 Stainless steel
Face Plate	EPDM rubber
Base Plate	IP54
Cover Plate	Yes
Mounting Method	Knockouts, qty 4+
Pretreatment	High pressure/high temperature phosphate wash and rinse
Finish	Black wrinkle powder coating (TGIC outdoor polyester)
UV Protection	Yes
Hardware	none
Packaging	Foam wrapped and boxed individually
Package Size	11 x 9 x 7
Weight	9 lbs
Shipping Method	UPS, FedEx, or LTL freight
Compliance	NDAA, Buy American, or USMCA/CUSMA (see website for details)
Warranty	1 year limited (see website for details)
Inventory Status	In-Stock (inventory levels viewable for registered users on pedestalpro.com)

SIMILAR PRODUCTS


MC-PC-10-E-BLK


Lando-SS-10x8-E


Portra-CS-8x10-E


Portra-SS-8x10-E


MC-CS-10-E


MC-SS-10-E

947 W 500 N | Suite 101 | Lindon, Utah | 84042 800.660.3072 | info@pedestalpro.com **pedestalpro.com**